Work Order ID 70561

Monday, June 13, 2011 10:06:06 AM

Item ID: D350-591-213 **Accept** **Setup Start** **Stop**

Revision ID:

Item Name: Heli-Access-Step, Short LH

Start Date: 6/10/2011 **Start Qty:** 4.00 **Cust Item ID:**

Required Date: 6/22/2011 **Req'd Qty:** 4.00 **Customer:**

Reference:

Approvals: **Process Plan:** ll **Date:** 11-06-13 **Tooling:** _____ **Date:** _____ **Run Start** **Stop**

QC: _____ **Date:** _____ **SPC (Y/N):** _____ **Date:** _____

Sequence ID/ Work Center ID	Operation Description	Set Up/ Run Hours	Tool ID	Tool #	Plan Code	Accept Qty	Reject Qty	Reject Number	Insp. Stamp
100	DOCUMENT CONTROL	0.00							
DC									
Document Control	**Memo**	0.00							
	Photocopy bluefile and type labels as per PPP D350-591-213 CHG003								
110	Large Fab	0.00							
Large Fab									
Large Fab	**Memo**	0.00							
	1-Cut D2622-120 extrusion to 59.75" long as per Dwg D3078 2-Drill extrusion as per Dwg D3078 using Jig DT8680 for rivets. 3-Deburr								

Draw Nbr	Revision Nbr
D3078	A
DSI 9472	A

for CL 11-7-13

11/07/13

11.06.22 4 0

Dart Aerospace Ltd

W/O:		WORK ORDER CHANGES					
DATE	STEP	PROCEDURE CHANGE	By	Date	Qty	Approval Chief Eng / Prod Mgr	Approval QC Inspector

Part No: _____ **PAR #:** _____ **Fault Category:** _____ **NCR:** Yes No **DQA:** _____ **Date:** _____

Resolution: _____ **Disposition:** _____ **QA: N/C Closed:** _____ **Date:** _____

NCR:		WORK ORDER NON-CONFORMANCE (NCR)						
DATE	STEP	Description of NC Section A	Corrective Action Section B			Verification Section C	Approval Chief Eng	Approval QC Inspector
			Initial Chief Eng	Action Description Chief Eng	Sign & Date			

NOTE: Date & initial all entries

Work Order ID 70561

Monday, June 13, 2011 10:06:06 AM

Item ID: D350-591-213 **Accept** **Setup Start** **Stop**

Revision ID:

Item Name: Heli-Access-Step, Short LH

Start Date: 6/10/2011 **Start Qty:** 4.00 **Cust Item ID:**

Required Date: 6/22/2011 **Req'd Qty:** 4.00 **Customer:**

Reference:

Approvals: **Process Plan:** _____ **Date:** _____ **Tooling:** _____ **Date:** _____ **Run Start** **Stop**

QC: _____ **Date:** _____ **SPC (Y/N):** _____ **Date:** _____

Sequence ID/ Work Center ID	Operation Description	Set Up/ Run Hours	Tool ID	Tool #	Plan Code	Accept Qty	Reject Qty	Reject Number	Insp. Stamp
120	QC6- Inspect dimensions to drawing	0.00							
QC	**Memo**	0.00				4			
Quality Control									
130		0.00							
Large Fab	Large Fab					4	Ø		
Large Fab	**Memo**	0.00							
	1-Bevel end for welding FWD ONLY 2-Weld Support using Jig DT8681, weld Fwd End Plate as per QSI 004 & Dwg D3072 A/R Aluminum Rod 114703 3-Grind End Plate flush 117884								
140	QC9- Inspect visual per QSI004- Fusion Welds	0.00							
QC	**Memo**	0.00				4	Ø		
Quality Control									

Dart Aerospace Ltd

W/O:		WORK ORDER CHANGES					
DATE	STEP	PROCEDURE CHANGE	By	Date	Qty	Approval Chief Eng / Prod Mgr	Approval QC Inspector

Part No: _____ **PAR #:** _____ **Fault Category:** _____ **NCR:** Yes No **DQA:** _____ **Date:** _____

Resolution: _____ **Disposition:** _____ **QA: N/C Closed:** _____ **Date:** _____

NCR:		WORK ORDER NON-CONFORMANCE (NCR)						
DATE	STEP	Description of NC Section A	Corrective Action Section B			Verification Section C	Approval Chief Eng	Approval QC Inspector
			Initial Chief Eng	Action Description Chief Eng	Sign & Date			

NOTE: Date & initial all entries

H:\fFORMS\Quality Assurance\approved QA\NCRWO RevE

Work Order ID 70561

Monday, June 13, 2011 10:06:06 AM

Item ID: D350-591-213 **Accept** **Setup Start** **Stop**

Revision ID:

Item Name: Heli-Access-Step, Short LH

Start Date: 6/10/2011 **Start Qty:** 4.00 **Cust Item ID:**

Required Date: 6/22/2011 **Req'd Qty:** 4.00 **Customer:**

Reference:

Approvals: **Process Plan:** _____ **Date:** _____ **Tooling:** _____ **Date:** _____ **Run Start** **Stop**

QC: _____ **Date:** _____ **SPC (Y/N):** _____ **Date:** _____

Sequence ID/ Work Center ID	Operation Description	Set Up/ Run Hours	Tool ID	Tool #	Plan Code	Accept Qty	Reject Qty	Reject Number	Insp. Stamp
150 QC Quality Control	QC5- Inspect part completeness to step on W/O	0.00							
	Memo	0.00 Sulo8/29				x4 LH			
160 HandFinish Hand Finishing	Chemical Conversion Coat per QSI005 4.1	0.00							
	Memo	0.00 N/Ae 11-06-29				x4			
170 QC Quality Control	QC3- Inspect Part Finish	0.00							
	Memo	0.00 SB 11/07/06				4			

Dart Aerospace Ltd

W/O:		WORK ORDER CHANGES					
DATE	STEP	PROCEDURE CHANGE	By	Date	Qty	Approval Chief Eng / Prod Mgr	Approval QC Inspector

Part No: _____ PAR #: _____ Fault Category: _____ NCR: Yes No DQA: _____ Date: _____

Resolution: _____ Disposition: _____ QA: N/C Closed: _____ Date: _____

NCR:		WORK ORDER NON-CONFORMANCE (NCR)						
DATE	STEP	Description of NC Section A	Corrective Action Section B			Verification Section C	Approval Chief Eng	Approval QC Inspector
			Initial Chief Eng	Action Description Chief Eng	Sign & Date			

NOTE: Date & initial all entries

H:\fFORMS\Quality Assurance\approved QA\NCRWO RevE

Work Order ID 70561

Monday, June 13, 2011 10:06:06 AM

Item ID: D350-591-213
Revision ID:
Item Name: Heli-Access-Step, Short LH
Start Date: 6/10/2011 **Start Qty:** 4.00
Required Date: 6/22/2011 **Req'd Qty:** 4.00
Reference:

Accept

Setup **Start**
Stop

Cust Item ID:
Customer:

Run **Start**
Stop

Approvals: **Process Plan:** _____ **Date:** _____ **Tooling:** _____ **Date:** _____
QC: _____ **Date:** _____ **SPC (Y/N):** _____ **Date:** _____

Sequence ID/ Work Center ID	Operation Description	Set Up/ Run Hours	Tool ID	Tool #	Plan Code	Accept Qty	Reject Qty	Reject Number	Insp. Stamp
200 Large Fab Large Fab	Large Fab	0.00							
	Memo 1- Rivet Leg Assembly as per Dwg D3078. 2-Bevel Aft end for welding 3-Inspect for foreign object as per QSI 024 4-Weld Aft End Plate as per QSI 004 & Dwg D3078 A/R Aluminum Rod M114703 5-Grind End Plate flush	0.00	11·07·06 11·07·06			4 4	∅ ∅		
210 QC Quality Control	QC10- Inspect visual per QSI004- ground welds	0.00							
	Memo	0.00	8/11/08			4			
220 QC Quality Control	QC5- Inspect part completeness to step on W/O	0.00							
	Memo	0.00	8/11/08			4 LH			

Dart Aerospace Ltd

W/O:		WORK ORDER CHANGES					
DATE	STEP	PROCEDURE CHANGE	By	Date	Qty	Approval Chief Eng / Prod Mgr	Approval QC Inspector

Part No: _____ **PAR #:** _____ **Fault Category:** _____ **NCR:** Yes No **DQA:** _____ **Date:** _____

Resolution: _____ **Disposition:** _____ **QA: N/C Closed:** _____ **Date:** _____

NCR:		WORK ORDER NON-CONFORMANCE (NCR)						
DATE	STEP	Description of NC Section A	Corrective Action Section B			Verification Section C	Approval Chief Eng	Approval QC Inspector
			Initial Chief Eng	Action Description Chief Eng	Sign & Date			

NOTE: Date & initial all entries

Work Order ID 70561

Monday, June 13, 2011 10:06:06 AM

Item ID: D350-591-213 **Accept** **Setup Start**

Revision ID: **Stop**

Item Name: Heli-Access-Step, Short LH

Start Date: 6/10/2011 **Start Qty:** 4.00 **Cust Item ID:**

Required Date: 6/22/2011 **Req'd Qty:** 4.00 **Customer:**

Reference:

Approvals: **Process Plan:** _____ **Date:** _____ **Tooling:** _____ **Date:** _____ **Run Start**

QC: _____ **Date:** _____ **SPC (Y/N):** _____ **Date:** _____ **Stop**

Sequence ID/ Work Center ID	Operation Description	Set Up/ Run Hours	Tool ID	Tool #	Plan Code	Accept Qty	Reject Qty	Reject Number	Insp. Stamp
230 HandFinish Hand Finishing	Chemical Conversion Coat per QSI005 4.1	0.00							
	Memo	0.00				4LH			BL 11-7-8.
240 Powdercoat Powder Coating	White Gloss(Ref:4.3.5.1) per QSI005 4.3-Alum	0.00							
	Memo START TIME: 11:30 OVEN TEMPERATURE: 320 FINISH TIME: 12:00	0.00							
250 HandFinish Hand Finishing	Wing Walk as per dwg QSI005 4.4 Batch 117863	0.00							
	Memo	0.00							

M117745

4LHx0 M-L 11/07/11

4LH 0 BL 11-7-12.

Dart Aerospace Ltd

W/O:		WORK ORDER CHANGES					
DATE	STEP	PROCEDURE CHANGE	By	Date	Qty	Approval Chief Eng / Prod Mgr	Approval QC Inspector

Part No: _____ **PAR #:** _____ **Fault Category:** _____ **NCR:** Yes No **DQA:** _____ **Date:** _____

Resolution: _____ **Disposition:** _____ **QA: N/C Closed:** _____ **Date:** _____

NCR:		WORK ORDER NON-CONFORMANCE (NCR)						
DATE	STEP	Description of NC Section A	Corrective Action Section B			Verification Section C	Approval Chief Eng	Approval QC Inspector
			Initial Chief Eng	Action Description Chief Eng	Sign & Date			

NOTE: Date & initial all entries

H:\fFORMS\Quality Assurance\approved QA\NCRWO RevE

Work Order ID 70561

Monday, June 13, 2011 10:06:06 AM

Item ID: D350-591-213 **Accept** **Setup Start**

Revision ID:

Item Name: Heli-Access-Step, Short LH **Stop**

Start Date: 6/10/2011 **Start Qty:** 4.00 **Cust Item ID:**

Required Date: 6/22/2011 **Req'd Qty:** 4.00 **Customer:**

Reference:

Approvals: **Process Plan:** _____ **Date:** _____ **Tooling:** _____ **Date:** _____ **Run Start**

QC: _____ **Date:** _____ **SPC (Y/N):** _____ **Date:** _____ **Stop**

Sequence ID/ Work Center ID	Operation Description	Set Up/ Run Hours	Tool ID	Tool #	Plan Code	Accept Qty	Reject Qty	Reject Number	Insp. Stamp
260	QC3- Inspect Part Finish	0.00							
QC	Memo	0.00				4LH	ϕ		11/07/12
Quality Control									
270	Pick Kit	0.00							
Packaging	Memo	0.00				11/7/13			
Packaging									
280	QC4- 100% Inspect kits for completeness	0.00							
QC	Memo	0.00							
Quality Control									

S 11/07/13

+4
4L

Dart Aerospace Ltd

W/O:		WORK ORDER CHANGES					
DATE	STEP	PROCEDURE CHANGE	By	Date	Qty	Approval Chief Eng / Prod Mgr	Approval QC Inspector

Part No: _____ **PAR #:** _____ **Fault Category:** _____ **NCR:** Yes No **DQA:** _____ **Date:** _____

Resolution: _____ **Disposition:** _____ **QA: N/C Closed:** _____ **Date:** _____

NCR:		WORK ORDER NON-CONFORMANCE (NCR)						
DATE	STEP	Description of NC Section A	Corrective Action Section B			Verification Section C	Approval Chief Eng	Approval QC Inspector
			Initial Chief Eng	Action Description Chief Eng	Sign & Date			

NOTE: Date & initial all entries

H:\fFORMS\Quality Assurance\approved QA\NCRWO RevE

Work Order ID 70561

Monday, June 13, 2011 10:06:06 AM

Item ID: D350-591-213 **Accept** **Setup Start** **Stop**

Revision ID:

Item Name: Heli-Access-Step, Short LH

Start Date: 6/10/2011 **Start Qty:** 4.00 **Cust Item ID:**

Required Date: 6/22/2011 **Req'd Qty:** 4.00 **Customer:**

Reference:

Approvals: **Process Plan:** _____ **Date:** _____ **Tooling:** _____ **Date:** _____ **Run Start** **Stop**

QC: _____ **Date:** _____ **SPC (Y/N):** _____ **Date:** _____

Sequence ID/ Work Center ID	Operation Description	Set Up/ Run Hours	Tool ID	Tool #	Plan Code	Accept Qty	Reject Qty	Reject Number	Insp. Stamp
290		0.00							
Packaging	Packaging					11/7/13			
Packaging	**Memo**	0.00							
	Identify and pack for shipping as per PPP D350-591-213 Location: 30 PPP Rev: C								
300	QC21- Final Inspection - Work Order Release	0.00							
QC								11/7/14	
Quality Control	**Memo**	0.00							

MF 11-07-14

Dart Aerospace Ltd

W/O:		WORK ORDER CHANGES					
DATE	STEP	PROCEDURE CHANGE	By	Date	Qty	Approval Chief Eng / Prod Mgr	Approval QC Inspector

Part No: _____ **PAR #:** _____ **Fault Category:** _____ **NCR:** Yes No **DQA:** _____ **Date:** _____

Resolution: _____ **Disposition:** _____ **QA: N/C Closed:** _____ **Date:** _____

NCR:		WORK ORDER NON-CONFORMANCE (NCR)						
DATE	STEP	Description of NC Section A	Corrective Action Section B			Verification Section C	Approval Chief Eng	Approval QC Inspector
			Initial Chief Eng	Action Description Chief Eng	Sign & Date			

NOTE: Date & initial all entries

H:\FORMS\Quality Assurance\approved QA\NCRWO RevE

Picklist Print

Monday, June 13, 2011 10:06:12 AM

6

Work Order ID: 70561

Parent Item: D350-591-213

Parent Item Name: Heli-Access-Step, Short LH

Start Date: 6/10/2011 **Required Date:** 6/22/2011

Start Qty: 4.00 **Required Qty:** 4.00

Comments:
IPP Rev:B□05.10.14□Modified step 10□KJ/EC
IPP Rev:C 06-06-19 Added D2732-030 AS PER DSI9294 JLM
IPP Rev:C 06-06-27 Revised as per DSI9340 JLM IPP Rev:D
10.03.17 incorporate seq 180 to 200 remove qc5 DD verified
by:JLM IPP Rev:E
10.11.15 update qty on AN4-11A DD verf:EC

Component Item ID/ Item Name	Replacement Item ID	Mfg/ Purch	Bin Item	Primary Location	Last Location	Route Seq ID	Unit of Measure	Qty on Hand	Qty per Kit	Total Qty	Qty Issued	Date Issued	Status
D2622-120C Step Extrusion		Manufactured	No			110	Each	35.7000	0.5	2	11·06·22		
				Location		**Loc Qty**		**Loc Code**					
				HALL	368293	6				2			
					64409	6							
				WA		29.7							
					46910	2							
					66970	27.7							
D3067-1 End Plate		Manufactured	No			130	Each	87.0000	1	4	11·06·22		
				Location		**Loc Qty**		**Loc Code**					
				WA		2							
					67582	2							
				WA016		85							
					68214	85				4			

Dart Aerospace Ltd

W/O:		WORK ORDER CHANGES					
DATE	STEP	PROCEDURE CHANGE	By	Date	Qty	Approval Chief Eng / Prod Mgr	Approval QC Inspector

Part No: _____ **PAR #:** _____ **Fault Category:** _____ **NCR:** Yes No **DQA:** _____ **Date:** _____

Resolution: _____ **Disposition:** _____ **QA: N/C Closed:** _____ **Date:** _____

NCR:		WORK ORDER NON-CONFORMANCE (NCR)						
DATE	STEP	Description of NC Section A	Corrective Action Section B			Verification Section C	Approval Chief Eng	Approval QC Inspector
			Initial Chief Eng	Action Description Chief Eng	Sign & Date			

NOTE: Date & initial all entries

Picklist Print

Monday, June 13, 2011 10:06:12 AM

Work Order ID: 70561

Parent Item: D350-591-213

Parent Item Name: Heli-Access-Step, Short LH

Start Date: 6/10/2011 **Required Date:** 6/22/2011

Start Qty: 4.00 **Required Qty:** 4.00

D3063-1 Support	Manufactured	No	130	Each	34.0000	1	4	11.06.22

Location	Loc Qty	Loc Code	
WA	20		
66182	20		2
WA016	14		
59663	14		2

MS20600-AD4W4 Rivets	Purchased	No	180	Each	2,064.000	16	64	Ae 11.07.06

Location	Loc Qty	Loc Code	
ST321	2059		
116188	59		
117364	1000		
117601	200		
117885	800		64
WA018	5		
116712	5		

D3066-1 Spacer	Manufactured	No	180	Each	101.0000	2	8	11.07.06 Ae

Location	Loc Qty	Loc Code	
WA	101		
68337	20		
69738	81		8

Dart Aerospace Ltd

W/O:		WORK ORDER CHANGES					
DATE	STEP	PROCEDURE CHANGE	By	Date	Qty	Approval Chief Eng / Prod Mgr	Approval QC Inspector

Part No: _____ **PAR #:** _____ **Fault Category:** _____ **NCR:** Yes No **DQA:** _____ **Date:** _____

Resolution: _____ **Disposition:** _____ **QA: N/C Closed:** _____ **Date:** _____

NCR:		WORK ORDER NON-CONFORMANCE (NCR)						
DATE	STEP	Description of NC Section A	Corrective Action Section B			Verification Section C	Approval Chief Eng	Approval QC Inspector
			Initial Chief Eng	Action Description Chief Eng	Sign & Date			

NOTE: Date & initial all entries

Picklist Print

Monday, June 13, 2011 10:06:12 AM

Work Order ID: 70561

Parent Item: D350-591-213

Parent Item Name: Heli-Access-Step, Short LH

Start Date: 6/10/2011 **Required Date:** 6/22/2011

Start Qty: 4.00 **Required Qty:** 4.00

D3065-041	Manufactured	No	180	Each	44.0000	1	4	11.07.06 Ae

Step Leg Assembly Hi

Location	Loc Qty	Loc Code
WA	44	
66149	0	
67503	4	
69740	40	4

D3067-1	Manufactured	No	200	Each	87.0000	1	4	11.07.06

End Plate

Location	Loc Qty	Loc Code
WA	2	
67582	2	
WA016	85	
68214	85	4

AN3-35A	Purchased	No	270	Each	117.0000	2	18	11/7/13 4

S 4

Bolt

Location	Loc Qty	Loc Code
ST353	117	
117441	17	
117619	50	0
117794	50	

Dart Aerospace Ltd

W/O:		WORK ORDER CHANGES					
DATE	STEP	PROCEDURE CHANGE	By	Date	Qty	Approval Chief Eng / Prod Mgr	Approval QC Inspector

Part No: _____ **PAR #:** _____ **Fault Category:** _____ **NCR:** Yes No **DQA:** _____ **Date:** _____

Resolution: _____ **Disposition:** _____ **QA: N/C Closed:** _____ **Date:** _____

NCR:		WORK ORDER NON-CONFORMANCE (NCR)						
DATE	STEP	Description of NC Section A	Corrective Action Section B			Verification Section C	Approval Chief Eng	Approval QC Inspector
			Initial Chief Eng	Action Description Chief Eng	Sign & Date			

NOTE: Date & initial all entries

Picklist Print

Monday, June 13, 2011 10:06:13 AM

Work Order ID: 70561

Parent Item: D350-591-213

Parent Item Name: Heli-Access-Step, Short LH

Start Date: 6/10/2011 **Required Date:** 6/22/2011

Start Qty: 4.00 **Required Qty:** 4.00

D2856-400	Manufactured	No	270	f	121.6696	0.6	2	4

Abraison Strip

Location	Loc Qty	Loc Code
ST403	121	
68076	121	
ST409	0.6696	
63735	0.6696	

cut qty of 1 at 4.00" X 7.20" as per dwg (D2856-400-720)

AN4-11A	Purchased	No	270	Each	274.0000	2	8	

Bolt

Location	Loc Qty	Loc Code
ST356	100	
117872	100	
ST357	174	
110382	1	
115316	173	

AN960JD416 NAS1149D0463J	Purchased	No	270	Each	0.0000	12	48	

Washer

D2230-1	Manufactured	No	270	Each	142.0000	2	8	

Lug

Location	Loc Qty	Loc Code
ST476	142	
67761	36	
67826	6	
69179	100	

Dart Aerospace Ltd

W/O:		WORK ORDER CHANGES					
DATE	STEP	PROCEDURE CHANGE	By	Date	Qty	Approval Chief Eng / Prod Mgr	Approval QC Inspector

Part No: _____ **PAR #:** _____ **Fault Category:** _____ **NCR:** Yes No **DQA:** _____ **Date:** _____

Resolution: _____ **Disposition:** _____ **QA: N/C Closed:** _____ **Date:** _____

NCR:		WORK ORDER NON-CONFORMANCE (NCR)						
DATE	STEP	Description of NC Section A	Corrective Action Section B			Verification Section C	Approval Chief Eng	Approval QC Inspector
			Initial Chief Eng	Action Description Chief Eng	Sign & Date			

NOTE: Date & initial all entries

H:\fFORMS\Quality Assurance\approved QA\NCRWO RevE

Picklist Print

Monday, June 13, 2011 10:06:13 AM

Work Order ID: 70561

Parent Item: D350-591-213

Parent Item Name: Heli-Access-Step, Short LH

Start Date: 6/10/2011 **Required Date:** 6/22/2011

Start Qty: 4.00 **Required Qty:** 4.00

MS21042L3	Purchased	No	270	Each	2,290.000	2	8	
Nut								

Location	Loc Qty	Loc Code
ST300	2290	
116391	9	
116549	581	
117441	800	
117601	400	
117885	500	

AN4-13A	Purchased	No	270	Each	306.0000	4	16	
Bolt								

Location	Loc Qty	Loc Code
ST357	306	
117962	306	

D2732	Manufactured	No	270	f	233.3281	1	4.210526	
Rubber Extrusion								

Location	Loc Qty	Loc Code
ST410	233.32811	
64283	233.32811	

cut qty of 4 at 3.00" as per dwg(D2732-030)

Dart Aerospace Ltd

W/O:		WORK ORDER CHANGES					
DATE	STEP	PROCEDURE CHANGE	By	Date	Qty	Approval Chief Eng / Prod Mgr	Approval QC Inspector

Part No: _____ **PAR #:** _____ **Fault Category:** _____ **NCR:** Yes No **DQA:** _____ **Date:** _____

Resolution: _____ **Disposition:** _____ **QA: N/C Closed:** _____ **Date:** _____

NCR:		WORK ORDER NON-CONFORMANCE (NCR)						
DATE	STEP	Description of NC Section A	Corrective Action Section B			Verification Section C	Approval Chief Eng	Approval QC Inspector
			Initial Chief Eng	Action Description Chief Eng	Sign & Date			

NOTE: Date & initial all entries

H:\fFORMS\Quality Assurance\approved QA\NCRWO RevE

Picklist Print

Monday, June 13, 2011 10:06:14 AM

Work Order ID: 70561

Parent Item: D350-591-213

Parent Item Name: Heli-Access-Step, Short LH

Start Date: 6/10/2011 **Required Date:** 6/22/2011

Start Qty: 4.00 **Required Qty:** 4.00

D2230-3 Lug		Manufactured	No	270	Each	34.0000	2	8	B70694
AN960JD10 Washer	NAS1149D0363J	Purchased	No	270	Each	0.0000	4	16	M117291
MS21042L4 Nut		Purchased	No	270	Each	5,203.000	6	24	11/7/13
AN4-16A Bolt		Purchased	No	270	Each	252.0000	4	16	11/7/13

Location	Loc Qty	Loc Code
Return 2010	4	
62927	2	
63544	2	
ST476	30	
68246	30	

Location	Loc Qty	Loc Code
ST300	5203	
117441	2903	
~~117601~~	800	
117885	1500	

Location	Loc Qty	Loc Code
ST358	252	
116400	52	
~~117514~~	100	
117872	100	

Dart Aerospace Ltd

W/O:		WORK ORDER CHANGES					
DATE	STEP	PROCEDURE CHANGE	By	Date	Qty	Approval Chief Eng / Prod Mgr	Approval QC Inspector

Part No: _____ **PAR #:** _____ **Fault Category:** _____ **NCR:** Yes No **DQA:** _____ **Date:** _____

Resolution: _____ **Disposition:** _____ **QA: N/C Closed:** _____ **Date:** _____

NCR:		WORK ORDER NON-CONFORMANCE (NCR)						
DATE	STEP	Description of NC Section A	Corrective Action Section B			Verification Section C	Approval Chief Eng	Approval QC Inspector
			Initial Chief Eng	Action Description Chief Eng	Sign & Date			

NOTE: Date & initial all entries

H:\fFORMS\Quality Assurance\approved QA\NCRWO RevE

DESIGN	DRAWN BY	DART AEROSPACE LTD HAWKESBURY, ONTARIO, CANADA	
CHECKED	APPROVED	DRAWING NO. D3078	REV. A SHEET 1 OF 2
DATE 02.09.11		TITLE STEP ASSEMBLY, HI SHORT	SCALE NTS
A	02.09.11	NEW ISSUE	

DART

QA COPY ISSUED

RELEASED
02.09.20

SHOP COPY
RETURN TO
ENGINEERING
UNCONTROLLED COPY
SUBJECT TO AMENDMENT
WITHOUT NOTICE
WORK ORDER
NO. 105

Part No.	Description	QTY -041	QTY -042
D3078-041	**Step Assembly, High Short (LH)**	**X**	
D3078-042	**Step Assembly, High Short (RH)**		**X**
D2622-60	STEP EXTRUSION	1	1
D3063-1	SUPPORT	1	1
D3065-041	LEG ASSEMBLY	1	1
D3066-1	SPACER	2	2
D3067-1	END PLATE	2	2
MS20600AD4W4	RIVET	16	16

GENERAL NOTES:

1) –041 SHOWN, FOR –042 INSTALL D3063-1 SUPPORT OPPOSITE SIDE
2) WELD PER DART QSI 004
3) FINISH: CHEMICAL CONVERSION COAT PER DART QSI 005 4.1
   POWDER COAT ASSEMBLY WHITE (4.3.5.1) PER DART QSI 005 4.3
   BLACK ANTI-SKID PAINT PER DART QSI 005 4.4
4) TOLERANCES ARE PER DART QSI 018 UNLESS OTHERWISE NOTED.

Dart Aerospace Ltd

W/O:		WORK ORDER CHANGES					
DATE	STEP	PROCEDURE CHANGE	By	Date	Qty	Approval Chief Eng / Prod Mgr	Approval QC Inspector

Part No: _____ **PAR #:** _____ **Fault Category:** _____ **NCR:** Yes No **DQA:** _____ **Date:** _____

Resolution: _____ **Disposition:** _____ **QA: N/C Closed:** _____ **Date:** _____

NCR:		WORK ORDER NON-CONFORMANCE (NCR)						
DATE	STEP	Description of NC Section A	Corrective Action Section B			Verification Section C	Approval Chief Eng	Approval QC Inspector
			Initial Chief Eng	Action Description Chief Eng	Sign & Date			

NOTE: Date & initial all entries

H:\fFORMS\Quality Assurance\approved QA\NCRWO RevE

DESIGN	DRAWN BY	DART AEROSPACE LTD HAWKESBURY, ONTARIO, CANADA	
CHECKED	APPROVED	DRAWING NO. D3078	REV. A SHEET 2 OF 2
DATE 02.09.11		TITLE STEP ASSEMBLY, HI SHORT	SCALE 1:20

DART

QA COPY ISSUED

RELEASED 02.09.2011

w/o 70562

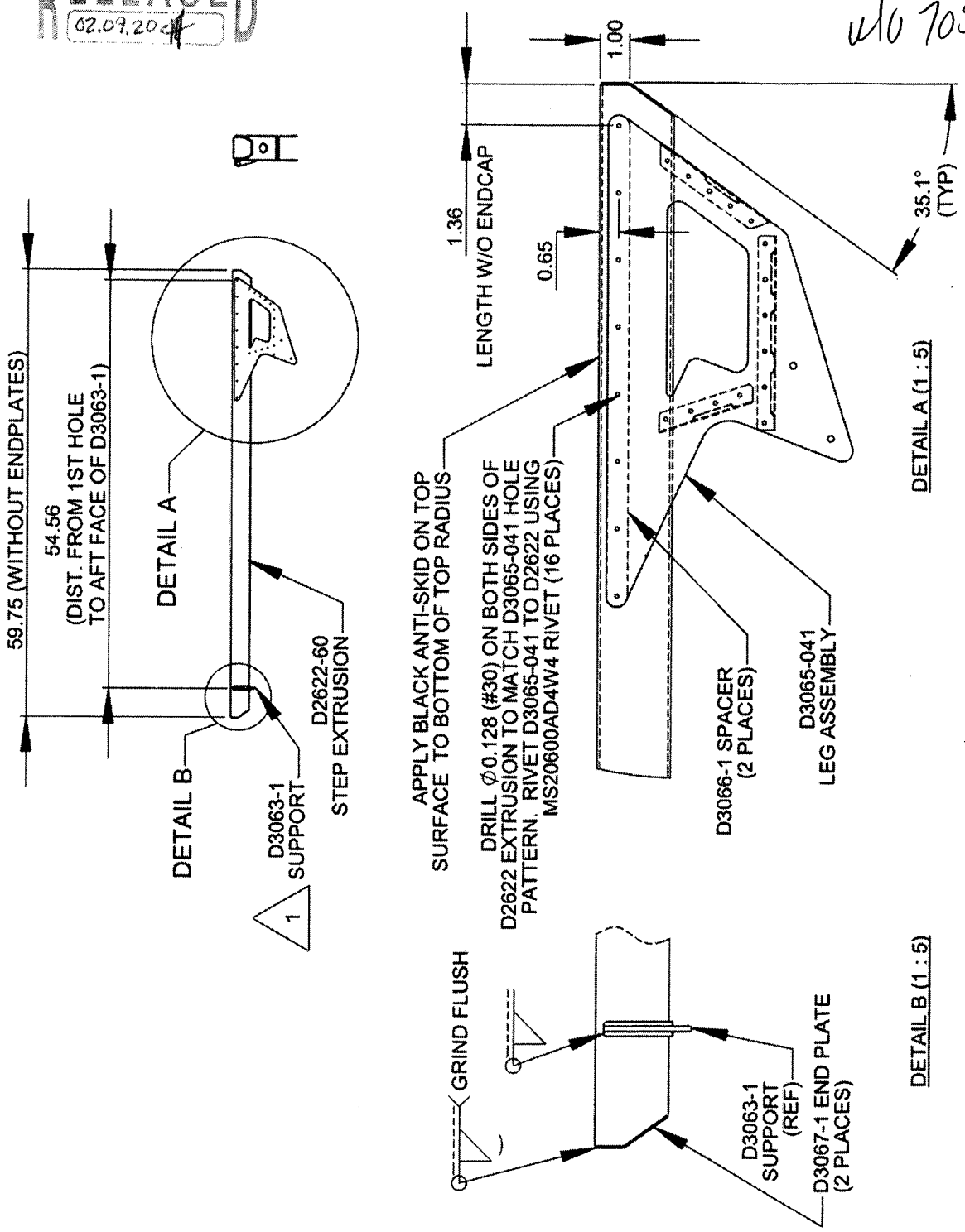

Dart Aerospace Ltd

W/O:		WORK ORDER CHANGES					
DATE	STEP	PROCEDURE CHANGE	By	Date	Qty	Approval Chief Eng / Prod Mgr	Approval QC Inspector

Part No: _____ PAR #: _____ Fault Category: _____ NCR: Yes No DQA: _____ Date: _____

Resolution: _____ Disposition: _____ QA: N/C Closed: _____ Date: _____

NCR:		WORK ORDER NON-CONFORMANCE (NCR)						
DATE	STEP	Description of NC Section A	Corrective Action Section B			Verification Section C	Approval Chief Eng	Approval QC Inspector
			Initial Chief Eng	Action Description Chief Eng	Sign & Date			

NOTE: Date & initial all entries

H:\fFORMS\Quality Assurance\approved QA\NCRWO RevE

Qty -211	Qty -212	Qty -213	Qty -214	Qty -215	Qty -216	Qty -311	Qty -312	Part Number	Description
X								D350-591-211	***Heli-Access-Step***™, Long Step – High Skid, LH
	X							D350-591-212	***Heli-Access-Step***™, Long Step – High Skid, RH
		X						D350-591-213	***Heli-Access-Step***™, Short Step – High Skid, LH
			X					D350-591-214	***Heli-Access-Step***™, Short Step – High Skid, RH
				X				D350-591-215	***Heli-Access-Step***™, Short Step – Low Skid, LH
					X			D350-591-216	***Heli-Access-Step***™, Short Step – Low Skid, RH
						X		D350-591-311	***Heli-Access-Step***™, Long Step – High Skid, LH
							X	D350-591-312	***Heli-Access-Step***™, Long Step – High Skid, RH
1								D3070-041	STEP ASSEMBLY (HIGH-LONG, LH)
	1							D3070-042	STEP ASSEMBLY (HIGH-LONG, RH)
		1						D3078-041	STEP ASSEMBLY (HIGH-SHORT, LH)
			1					D3078-042	STEP ASSEMBLY (HIGH-SHORT, RH)
				1				D3168-041	STEP ASSEMBLY (LOW-SHORT, LH)
					1			D3168-042	STEP ASSEMBLY (LOW-SHORT, RH)
						1		D3272-041	STEP ASSEMBLY (HIGH-LONG, LH)
							1	D3272-042	STEP ASSEMBLY (HIGH-LONG, RH)
4	4							D2182B035	RUBBER CUSHION
		2	2	2	2			D2230-1	MOUNTING LUG
		2	2	2	2	4	4	D2230-3	MOUNTING LUG
8	8							D2274	RADIUS BLOCK
						2	2	D2618	BUSHING
4	4	4	4	4	4			D2732-030	CUSHION
2	2	1	1	1	1	2	2	D2856-400-720	ABRASION STRIP
2	2							D3064-1	CLAMP
1	1							D3079-041	SUPPORT ASSEMBLY
4	4							D3080-1	CLAMP
						2	2	D3235-1	MOUNTING LUG
						1	1	D3278-041	SUPPORT ASSEMBLY
2	2	2	2	2	2	2	2	AN3-35A	BOLT
10	10	2	2	2	2			AN4-11A	BOLT
		4	4	4	4	8	8	AN4-13A	BOLT
						2	2	AN5-36A	BOLT
4	4	4	4	4	4	4	4	AN960JD10	WASHER
20	20	12	12	12	12	16	16	AN960JD416	WASHER
						4	4	AN960JD516	WASHER
2	2	2	2	2	2	2	2	MS21042L3	NUT
10	10	6	6	6	6	8	8	MS21042L4	NUT
						2	2	MS21042L5	NUT
						1	1	*DSI 9410-011	STEP MODIFICATION KIT

*DSI 9410-011 Step Modification Kits are provided with all D350-591-311 and D350-591-312 Steps. This kit is provided as an option for the installer and is therefore **NOT REQUIRED** to complete the installation of the D350-591-311 or D350-591-312 Steps. Refer to Figure 21 for installation of the DSI 9410-011 Kit.

8

REFERENCE ONLY

DART SERVICE INSTRUCTION

TO AMEND INSTALLATION INSTRUCTIONS D350-591 REV. G OR EARLIER
AND
INSTRUCTIONS OF CONTINUED AIRWORTHINESS ICA-D350-591 REV. 2 OR EARLIER

REF CANADIAN STC: SH92-6
REF FAA STC: SH967NE

For D350-591-213/-214/-215/-216 steps, customers have the option of installing D2732-030 cushion under the clamps to accommodate varying crosstube diameters and to improve fit, as indicted in Installation Instructions D350-591. This Service Instruction adds longer AN4-16A bolts to the parts list to allow installation of these cushions. See Figure 1 on sheet 2 of this service instruction for reference. Installation of the D2856-400-720 Abrasion Strips per Installation Instructions D350-591 is not required when the cushions are installed.

For D350-591-213/-214/-215/-216 steps at CHG 003, the parts list of D350-591 Rev. G and ICA-D350-591 Rev. 2 is amended as follows:

ADD:

Qty -213	Qty -214	Qty -215	Qty -216	Part Number	Description
X				D350-591-213	***Heli-Access-Step*** ™, Short Step – High Skid, LH
	X			D350-591-214	***Heli-Access-Step*** ™, Short Step – High Skid, RH
		X		D350-591-215	***Heli-Access-Step*** ™, Short Step – Low Skid, LH
			X	D350-591-216	***Heli-Access-Step*** ™, Short Step – Low Skid, RH
4	4	4	4	AN4-16A	BOLT

CANADA
DEPARTMENT OF TRANSPORT
AIRCRAFT CERTIFICATION
BRANCH
DAO # 01-O-01

APPROVED

BY: _____
D. SHEPHERD (DE # 02)

DATE: 09.08.05
CERT. NO.: SH92-6
ISSUE NO.: 11

REV.	DESCRIPTION	BY	DATE
A	NEW ISSUE	RF	09.08.05

DESIGN	GP	**DART AEROSPACE LTD** HAWKESBURY, ONTARIO, CANADA
DRAWN	RF	
CHECKED	LP	DRAWING NO. DSI 9472 — REV. A — SHEET 1 OF 2
MFG. APPR.	NOA	
APPROVED		TITLE: BOLT ADDITION — SCALE: NTS
DE APPR.		
DATE	09.08.05	